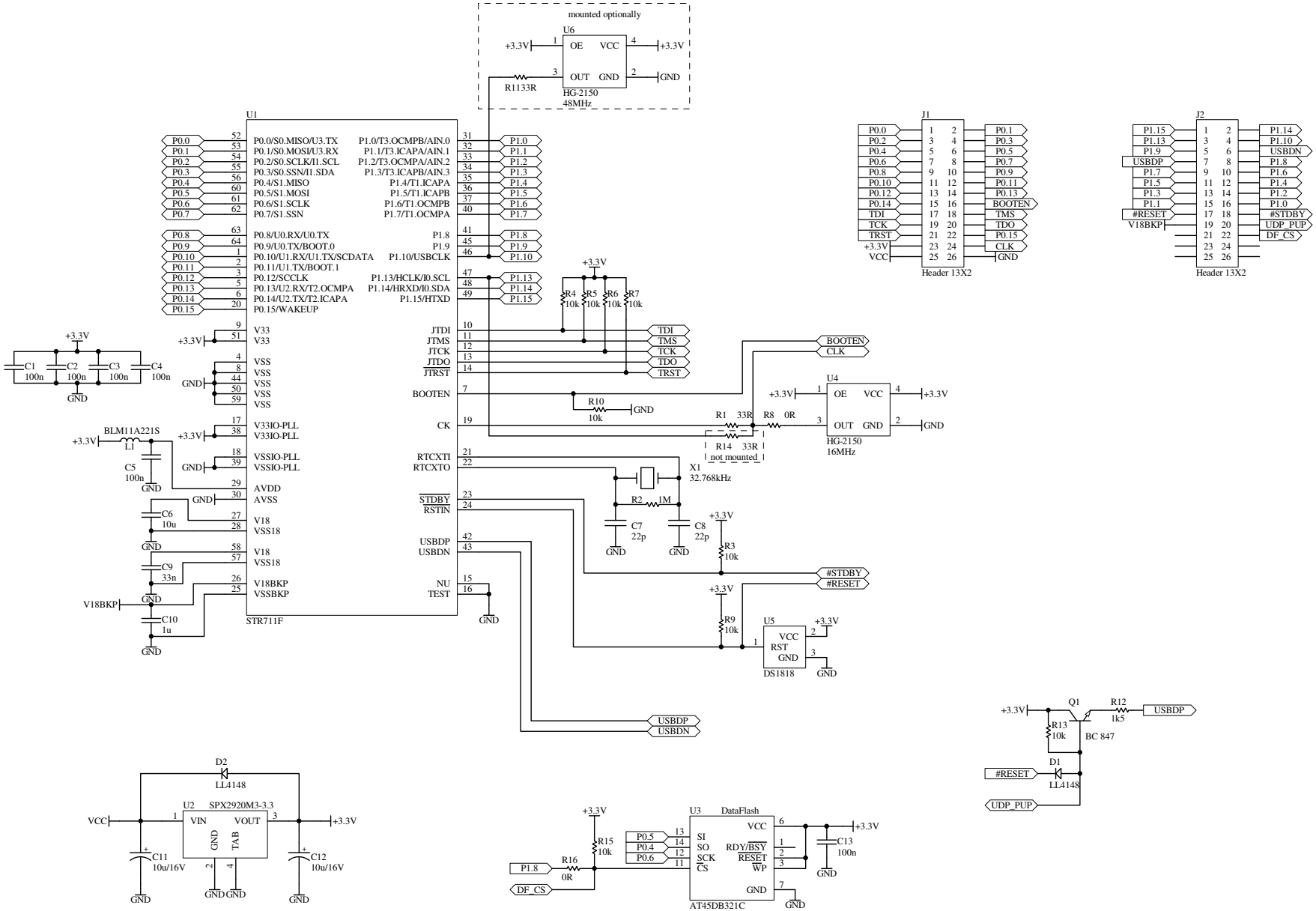

Propox® Many ideas one solution	http://www.propox.com email: support@propox.com	
Title: MMstr71xF		
Size:	File:	Rev: 2
	Date: 09-01-2006	Sheet 1 of 1